LORAWAN CONVERTER

M-BUS-2

USER MANUAL

DOCUMENT REVISION	FIRMWARE VERSION
12	2.3

CONTENTS

INTRODUCTION 3
1 DESCRIPTION AND OPERATION 4
Device description 4
Work algorithm 4
Functional 5
Marking 6
2 SPECIFICATION 7
Device specification 7
Default device settings 8
3 OPERATION 9
Device appearance 9
Contacts 10
Led indication 10
Mounting recomendations 11
Converter operation in the independent poll mode of the metering devices 14
Converter operation in the universal poll mode 14
4 COMMUNICATION PROTOCOL – 1.1 VERSION 15
Converter M-BUS-2 transmits the following types of packets 15
1. Packet with current readings from connected heat meter 15
2. Packet with data from connected M-BUS device in universal poll mode 16
3. Packet with time correction request 16
4. Settings packet 17
Converter M-BUS-2 receives packets of the following types 18
1. Real-time clock adjustment 18
2. Packet with request of settings 18
3. Packet with settings is identical to such packet from device 18
5 STORAGE AND TRANSPORTATION REQUIREMENTS 20
6 CONTENT OF THE PACKAGE 21
7 WARRANTY 22

INTRODUCTION

This manual is designated for M-BUS-2 device (hereinafter – device, converter) manufactured by Vega-Absolute OOO and provides information on powering and activation procedure, control commands and functions of the device.

This manual is targeted at specialists familiar with installation work fundamentals for electronic and electrical equipment.

Vega-Absolute OOO reserves the right to make changes to the manual related to the improvement of equipment and software, as well as to eliminate typos and inaccuracies, without prior notice.

1 DESCRIPTION AND OPERATION

DEVICE DESCRIPTION

The device M-BUS-2 is designed for reading of values from metering instruments via M-BUS interface and further accumulating and transmitting of this data to the LoRaWAN® network.

The converter is powered by a 6400 mAh built-in battery.

Converter M-BUS may operate in the independent poll mode of the metering devices converter only with the next supported devices:

- Heat meter «Teplouchet-1»
- Heat meter «STE 21 «Berill»
- Heat meter «ELF-M Teplovodomer»
- Heat meter Landis Gyr T230
- Heat meter Sharky 775
- Heat meter Pulsar
- Heat meter Calec ST II
- Heat meter Calec ST II_2
- Heat meter Sensonic II
- Heat calculator ZENNER_MULTIDATA_WR3
- Heat meter "Pulse STK-15"

The list of supported metering devices depends on the firmware version, therefore, the issue of support for a specific device should be specified when ordering.

Starting with firmware 2.0 and higher, different types of metering devices can be connected to one converter

The converter is configured via USB using the special «Vega LoRaWAN Configurator» software.

WORK ALGORITHM

Vega M-BUS-2 operates in the following modes:

«Storage» — it is a mode for storage and transportation. In this mode, the device does not regularly transmit data to the network.

«Active» - device operating mode.

Before starting to use the converter, it is necessary to take out of the «Storage» mode.

Vega M-BUS-2 device supports two activation methods in the LoRaWAN® network - ABP and OTAA. One of the methods can be chosen using the «Vega LoRaWAN Configurator» application (see the "User Manual" for the program).

Method ABP. After pressing the start button, the device immediately starts working in the «Active» mode.

Method OTAA. After pressing the start button, the device will make three attempts to connect to the network in the frequency plan specified when setting up. Upon receipt of confirmation of activation in the LoRaWAN® network, the device will give a signal by the indicator (glow for 5 seconds) and go into the «Active» mode. If all attempts are unsuccessful, the counter will continue to accumulate data and will try to connect to the network every 6 hours.

It is possible to transfer the device from the "Active" mode back to the "Storage" mode without disconnecting the power supply (battery or external) by long pressing the start button (more than 5 seconds).

The device generates a packet with the current state with a configurable period from 5 minutes to 24 hours. Packets are saved in the device memory and are transmitted during the next session of communication with the LoRaWAN® network.

Example

If the data collection period is 24 hours, then the package will be generated at 00.00 according to the internal clock of the device.

If the data collection period is 12 hours, then at 00.00 and at 12.00, and so on.

The data transfer period can be adjusted from 5 minutes to 24 hours. When communicating, the device starts sending packets with readings, starting with the earliest one. The specific data transfer time cannot be set, it is determined randomly for each device within the selected data transfer period from the moment of connecting to the network.

Example

The data transfer period is set to 30 minutes, and the device was started at 16:40 according to the device's internal clock. At random counting, the device was assigned the time 16:41 to transmit a packet in a half-hour period from 16:40 to 17:10. Thus, packets from this device will be transmitted at 16:41, 17:11, 17:41, 18:11, and so on every 30 minutes according to the internal clock of the device..

The internal clock is set automatically when connected to the device via USB, and can also be adjusted via the LoRaWAN® network.

FUNCTIONAL

M-BUS-2 converter is A class device (LoRaWAN® classification) and has the following features:

- ADR support (Adaptive Data Rate)
- Sending of confirmed packets (configurable)
- Temperature measurement by the internal temperature sensor
- Charge measuring of the built-in battery (%)

MARKING

Device marked with sticker that contain the next information:

- Device model;
- DevEUI;
- Month and year of manufacture.

Sticker located in three places – on device case, in factory certificate and on the packing box.

Besides, there is an additional sticker located on the packing box and contains:

- Information about firmware version;
- QR code containing activation keys for the device in the LoRaWAN® network and other identifiers.

2 SPECIFICATION

DEVICE SPECIFICATION

MAIN	
M-BUS interface	1
Quantity of connecting M-BUS devices	up to 10
USB-port	mini-USB, type B
Operating temperatures	-40...+85 °C
LoRaWAN®	
LoRaWAN® class	A
Quantity of LoRa channels	16
Default frequency plans	RU868, EU868, KZ865, custom (EU868 based)
Frequency plans available on request	IN865, AS923, AU915, KR920, US915
Activation type	ABP и OTAA
Communication period	5, 15, 30 minutes, 1, 6, 12 or 24 hours
Data collection period	5, 15, 30 minutes, 1, 6, 12 or 24 hours
Memory amount for storing packets	100 packets
Antenna connector	SMA
Sensitivity	-138 dBm
Radio coverage in restrained urban conditions	max 5 km
Radio coverage within line of sight	max 15 km
Transmitter power by default	25 mW (configurable)
POWER	
Built-in battery	6400 mAh
Calculated number of packets sent by the device, not less	15 000
CASE	
Housing dimensions, no more than	104 x 95 x 29 mm
Ingress protection rating	IP54
Mounting	With screws
PACKAGE	
Dimensions	152 x 123 x 38 mm
Weight	0,310 kg

DEFAULT DEVICE SETTINGS

PARAMETER	VALUE
Frequency plan	RU868
Activation type	ABP or OTAA
Adaptive Data Rate (ADR)	ON
Confirmed Uplinks	OFF
Rx 1 delay	1 second
Join accept delay	5 seconds
Uplink number of transmissions	1
Data rate	DR0
Power	14 dBm
Communication period	24 hours
Data collection period	24 hours
Time zone	UTC +00:00

For changing the device settings, you need to connect to it with "Vega LoRaWAN Configurator" application. You can download app on the iotvega.com site in SOFT section as well as User Manual for configurator. Go to the app page.

3 OPERATION

DEVICE APPEARANCE

Vega M-BUS-2 is represented in black plastic case screwed together.

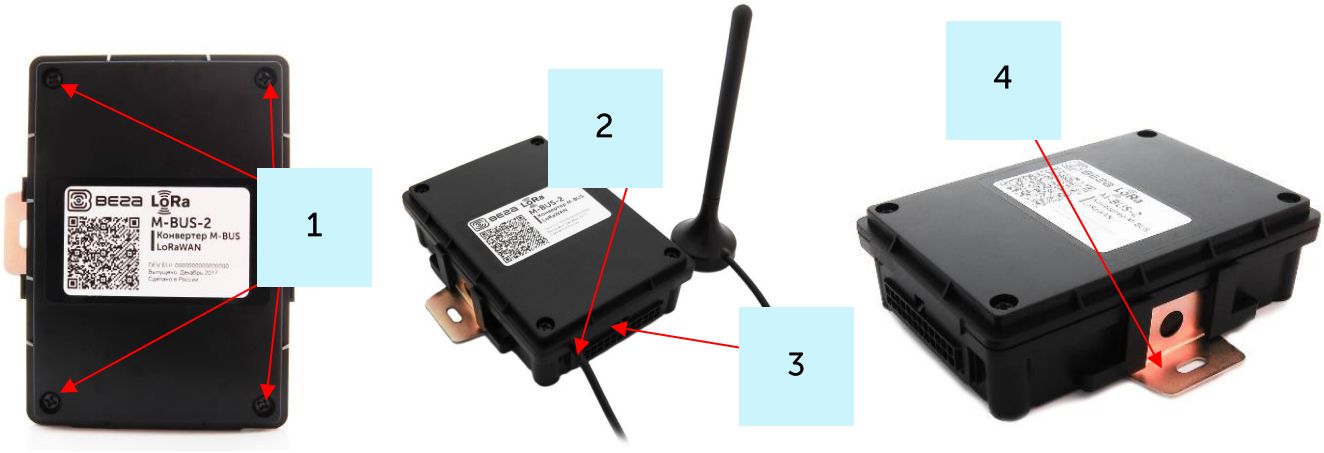

1 – screws ø 3 mm x 16 mm, cross ✚

2 – input of external antenna

3 – harness connector included

4 – screw fastening

All control and indication elements are located inside the case on the board.

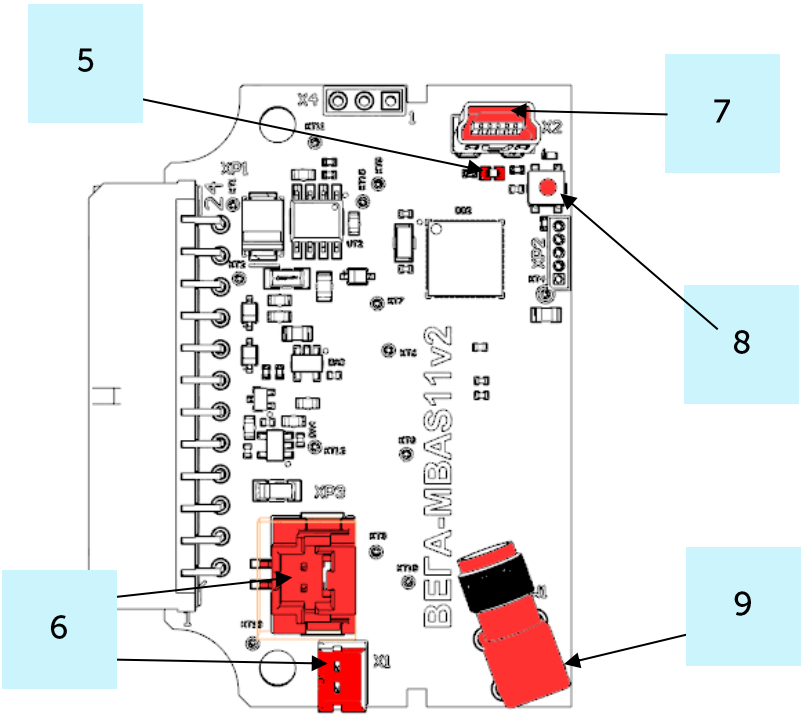

5 – led indicator

6 – power connectors

7 – USB-port

8 – start button

9 – SMA connector for an external LoRaWAN antenna connection

CONTACTS

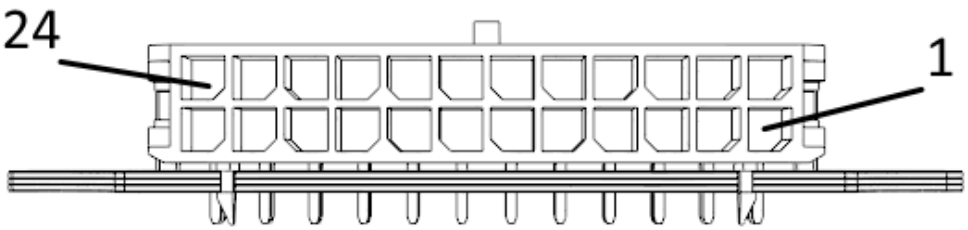

Converter has 12 contact pairs which are M-BUS interfaces. Converter provide connection up to 10 M-BUS devices. You can choose any 10 of 12 contact pairs. Wherein 1-2 contacts are M-BUS- (bot row), and 13-24 contacts are M-BUS+ (top row).

In order to increase the battery life, the physical level of the M-BUS interface is switch on (supply voltage is applied to the outputs MBAS +, MBAS-) just before meter polling with a programmable delay (the delay value is depends on the type of connected meter). The delay is introduced for initializing own meter interface and its preparing for receiving data from the converter. When the polling is complete, the physical M-BUS level is turned off.

LED INDICATION

There is one red LED on the board. The indication in only used when the device is activated in the LoRaWAN® network and when the operating modes are changed.

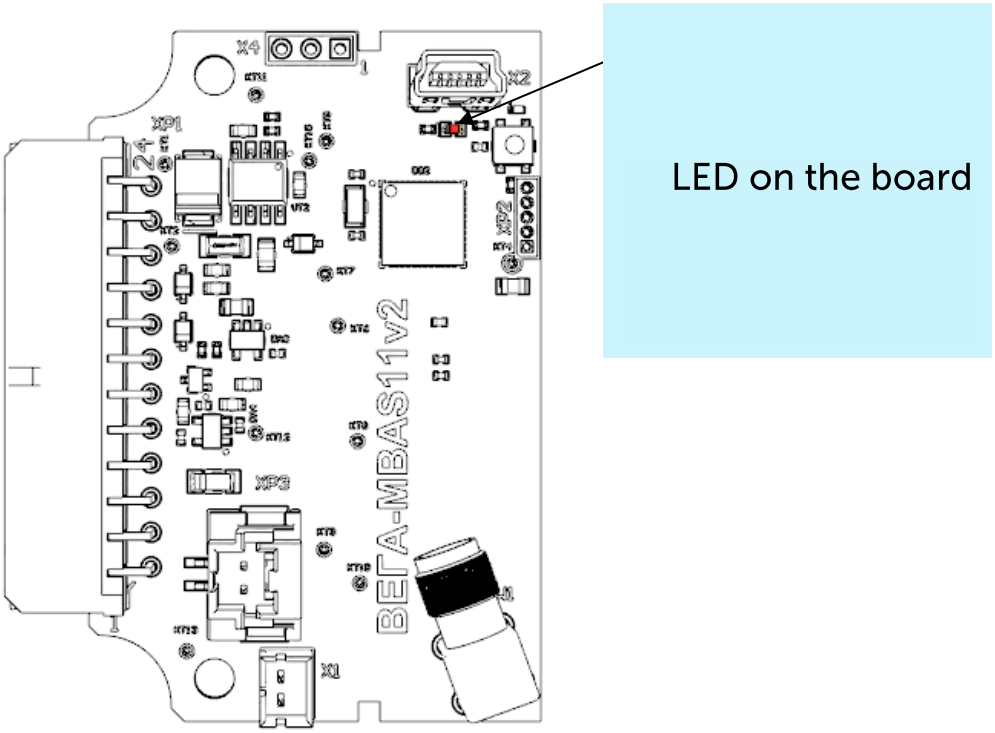

LED SIGNAL		MEANING
	Short flashlights	Linking to the network in progress
	One long flashing during 5 sec	The device has been successfully connected to the network and is in active mode
	Three flashing each by 1 sec	Linking to the network has been failed or the device switched to the «Storage» mode

In case of connection attempt fail, the device will continue to accumulate data and will attempt to connect to the network every 6 hours

MOUNTING RECOMENDATIONS

To provide the stable radio between the gateway and the device it is recommended avoiding the device installation in the places which are barriers for the radio signal getting through like a reinforced floors and walls, a basement, an underground facilities and wells, a metal case etc.

The necessary stage for the network deploying including a big quantity of end devices is a radio planning work with nature experiments.

Before starting mounting, make sure that the device has the latest firmware version

For mounting you will need:

- cross-shaped screwdriver ;
- wire stripper;
- laptop.

Step by step mounting be like:

1. Setting the devices and connecting them to the network are usually carried out in the office (see Network Deployment Manual).
2. Determination of suitable places for mounting at the object with a network tester.

3. De-energizing the connected equipment, metering devices, etc.
4. Stripping wires in a bundle and connecting external equipment to them.
5. Connecting all necessary wires to the M-BUS-2 contacts.
6. M-BUS-2 converter uses an external antenna for operation. It must be connected to the dedicated connector on the device board and lead out the wire through a special groove in the case.

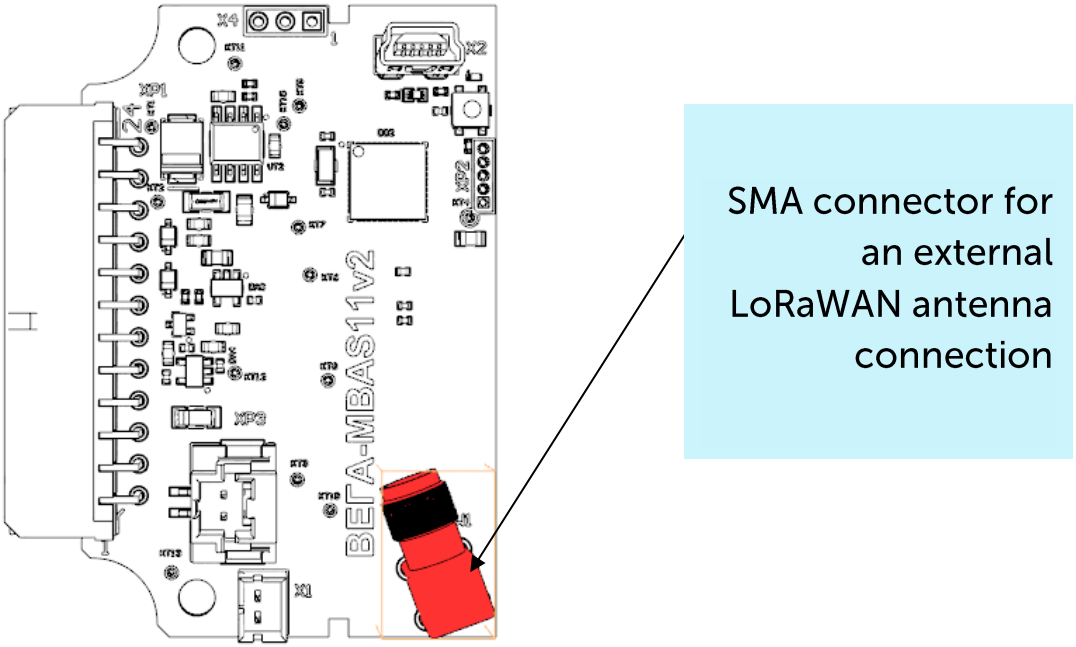

7. M-BUS-2 converter can be powered from built-in battery. For working with battery it is necessary to connect it to battery connector on the board.

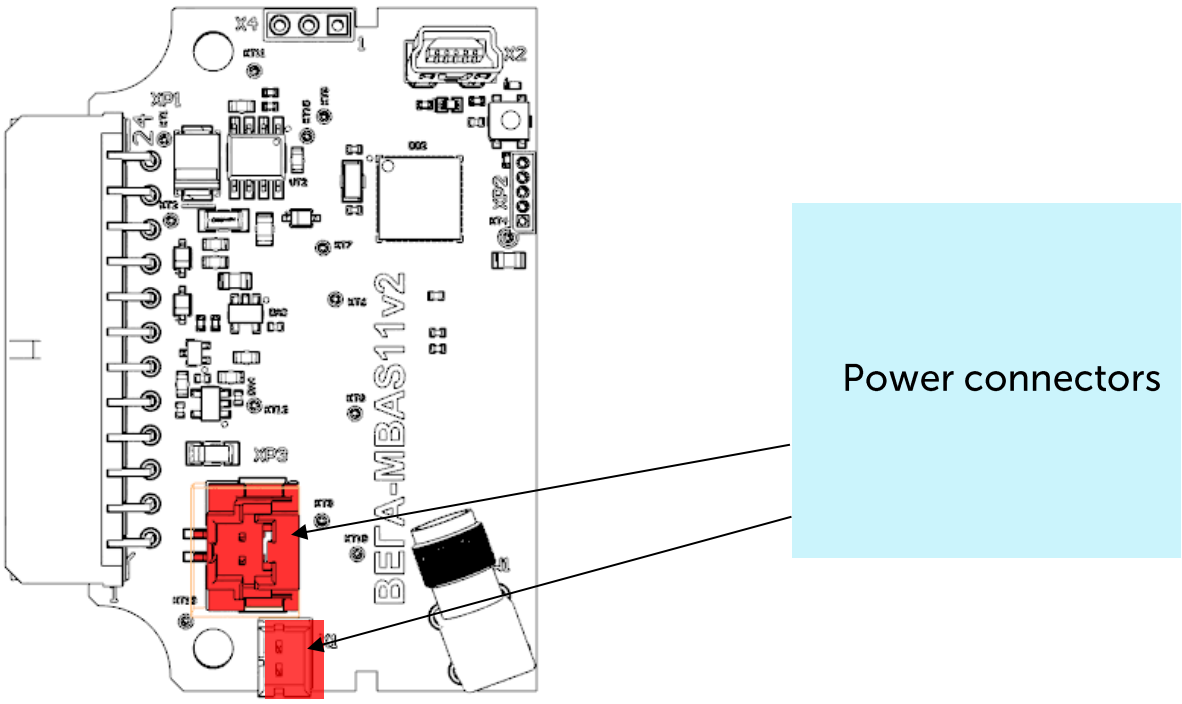

.

8. When the power is connected at the first time the device automatically switches to the “Active” mode and starts registration in the network. But if the device with connected battery or an external power has been switched to the “Storage” mode (by pressing on the start button more than 5 sec) than you need to press the button to start.

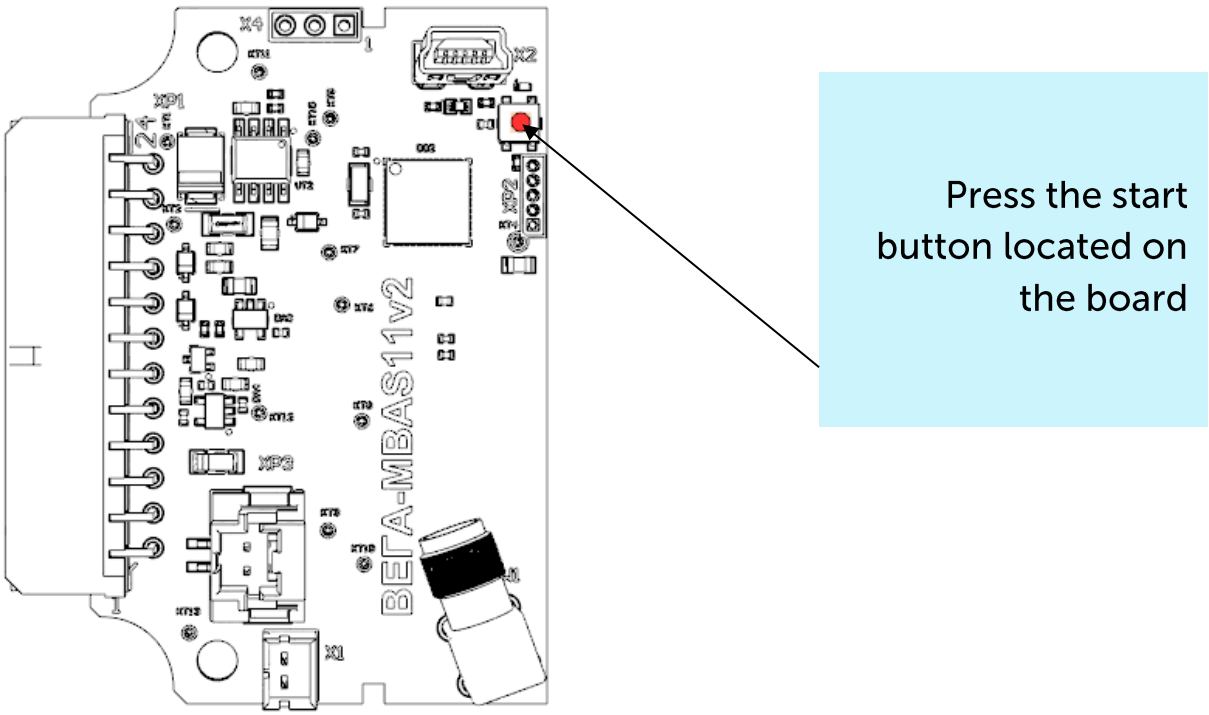

9. By the laptop make sure that the device successfully sends the data.
10. Assembling the device. It is necessary to make sure that the silicone gasket is installed exactly in the groove of the case, the fasteners are tightened sufficiently tightly, the case cover is tightly adjacent to the counterpart.
11. DIN-rail mounting or another available way to mount the device on the object.

CONVERTER OPERATION IN THE INDEPENDENT POLL MODE OF THE METERING DEVICES

In the independent poll mode, the converter periodically and consistently polls the metering devices at their secondary addresses. The addresses of the polling devices are writting to the converter using the "Vega LoRaWAN Configurator" application.

In case of a successful poll, the data transferred by the metering device is accumulated in the configurator memory and sent to the LoRaWAN® network in accordance with communication period. The communication period can be set in the "Vega LoRaWAN Configurator" application while converter connected to a computer.

CONVERTER OPERATION IN THE UNIVERSAL POLL MODE

To reduce the volume of data transmitted over the air, the user can use the universal polling mode. In this mode, the converter independently interrogates metering devices with user-specified commands in accordance with a customizable schedule. This reduces radio traffic and significantly increases the polling rate of the meter.

In the universal polling mode through configurator the user can set transmitted commands, progression of their transfer, intervals of transfer, timeout of waiting answer. Metering device's answer is packaged in "black box" and in accordance with period of data transfer. The user can ban to pack of metering device's answer, if, e.g., the answer on some command is need not to transfer.

By default, the universal polling mode is disabled, you can activate it using the Vega LoRaWAN Configurator program on the device tab [1] (look at chapter «Vega LoRaWAN Configurator»).

Activation of the universal poll mode leads to the blocking of independent polling of supported metering devices

[1] The described functionality is supported in the Configurator version 1.0.55 and higher.

4 COMMUNICATION PROTOCOL – 1.1 VERSION

This part describes the M-BUS-2 data exchange protocol with LoRaWAN® network.

In fields consisting of several bytes, the little-endian byte order is used

CONVERTER M-BUS-2 TRANSMITS THE FOLLOWING TYPES OF PACKETS

1. Packet with current readings from connected heat meter

Sent regularly or by request on LoRaWAN® port 2

Size in bytes	Field description	Data type
1 byte	Packet type, this packet = 1)	uint8
1 byte	Battery level, %	uint8
1 byte	Values of basic settings (bit field)	uint8
4 bytes	Meter secondary address	uint32
4 bytes	Time of readings in this packet (unixtime UTC), by the internal clock of the converter	uint32
4 bytes	The amount of thermal energy consumed, Wh	uint32
4 bytes	Total volume of coolant, l	uint32
4 bytes	Operating time, h	uint32
2 bytes	Current flow temperature ^{0}C*100	uint16
2 bytes	Current temperature in the return line ^{0}C*100	uint16
2 bytes	Current flow of coolant, l/h	uint16
4 bytes	Current flow of coolant, l/h	uint32
4 bytes	Power, W	uint32
1 byte	Environment (water, heat, gas, etc.)*	uint8

* The Environment (medium) field is encoded according to the MBUS protocol (protocol section 8.4.1 Measured Medium Variable Structure).

The converter has internal clock with a calendar, the time and date on which is factory set, as well as every time the device is configured via the USB interface. When sending a packet with the current readings, the device uses the data taken at the nearest time, which is multiple to the interval, set by the switches:

- 1 hour period: the readings of the beginning of the current hour are sent;
- 6 hours period: 00:00, 06:00, 12:00, 18:00 readings are sent;
- 12 hours period: 00:00, 12:00 readings are sent;
- 24 hours period: the readings of 00:00 of the current day are sent.

When transmitting on request the readings are taken in that moment.

A package of this type is transmitted separately for each connected meter. For example, if 5 metering devices are connected to the converter, 5 packets will be transferred to the next connection.

«Values of basic settings» bit field decoding

Bits	Field description
0 bit	Activation type 0 - OTAA, 1 – ABP
1 bit	Query for packet confirmation 0 – off, 1 – on
2,3,4 bit	Communication period: |1 == 0|2==0|3==0| - 5 minutes |1 == 1|2==0|3==0| - 15 minutes |1 == 0|2==1|3==0|- 30 minutes |1 == 1|2==1 |3==0|- 1 hour |1 == 0|2==0|3==1|- 6 hours |1 == 1|2==0|3==1|- 12 hours |1 == 0|2==1|3==1|- 24 hours
5 bit	reserve
6 bit	reserve
7 bit	reserve

2. Packet with data from connected M-BUS device in universal poll mode

Data is transmitted to LoRaWAN® port 2, universal poll mode

Size in bytes	Field description	Data type
1 byte	Packet type, this packet == 3	uint8
2 bytes	Total size of the received data by the interface	uint16
1 byte	Size of that packet	uint8
1 byte	That packet serial number	uint8
1 byte	Total number of packets	uint8
array	Data	uint8

LoRa data transmission technology imposes restrictions on the maximum packet size, depending on the speed at which the given packet is transmitted. If the data received through the external interface cannot be transmitted in one packet, they are split into several packets, which are transmitted sequentially.

3. Packet with time correction request

Sent every seven days on LoRaWAN® port 4.

Size in bytes	Field description	Data type
1 byte	Packet type, this packet == 255	uint8
4 bytes	Time of the modem at a moment of the packet transmission (unixtime UTC)	uint16

4. Settings packet

Transmitting on LoRaWAN® port 3.

Размер в байтах	Описание поля	Тип данных
1 byte	Packet type, this packet == 00	uint8
2 bytes	ID of parameter	uint16
1 byte	Data length (len)	uint8
len bytes	Parameter value	-----
2 bytes	ID of parameter	uint16
1 byte	Data length (len)	uint8
len bytes	Parameter value	-----
...	...	...
2 bytes	ID of parameter	uint16
1 byte	Data length (len)	uint8
len bytes	Parameter value	-----

CONVERTER M-BUS-2 RECEIVES PACKETS OF THE FOLLOWING TYPES

1. Real-time clock adjustment

Send by application on LoRaWAN® port 4

Size in bytes	Field description	Data type
1 byte	Packet type, this packet = 255	uint8
8 bytes	The value in seconds for which you need to adjust the time. Can be positive or negative	int64

2. Packet with request of settings

Sent by application on LoRaWAN® port 3

Size in bytes	Field description	Data type
1 byte	Packet type, this packet == 1	uint8

Answering that packet, the device sends the packet with settings.

3. Packet with settings is identical to such packet from device

Size in bytes	Field description	Data type
1 byte	Packet type, this packet == 00	uint8
2 bytes	ID of parameter	uint16
1 byte	Data length (len)	uint8
len bytes	Parameter value	-----
2 bytes	ID of parameter	uint16
1 byte	Data length (len)	uint8
len bytes	Parameter value	-----
...	...	...
2 bytes	ID of parameter	uint16
1 byte	Data length (len)	uint8
len bytes	Parameter value	-----

The package with settings sent to the device may not contain all the settings supported by the device, but only the part that needs to be changed.

Table of ID of M-BUS-2 parameters and these possible values.

ID of parameter	Description	Data length	Possible values
4	Confirmed uplinks	1 byte	1 – confirmed 2 – unconfirmed

5	ADR (Adaptive Data Rate)	1 byte	1 – enabled 2 – disabled
8	Uplinks number of transmissions	1 byte	from 1 to 15
16	Communication period	1 byte	1 – 1 hour 2 – 6 hours 3 – 12 hours 4 – 24 hours 5 – 5 minutes 6 – 15 minutes 7 – 30 minutes
32	MBUS interface speed	1 byte	1 – 300 2 – 600 3 – 1200 4 – 2400 5 – 4800 6 – 9600 7 – 19200 8 – 38400
33	External M-BUS device type	1 byte	0 – device type not set 1 – Teplouchet-1 2 – STE 21 «Berill» 3 – Danfoss Sonometer_500 4 – ELF_M 5 – Weser 6 – MULTICAL_801 7 – MULTICAL_402 8 – LANDIS_GYR_COMMON 9 – SHARKY_775 10 – PULSAR 11 – SONOSAFE_10 12 – CALEC_ST_II 13 – ABB 14 – SENSONIC_II 15 – CALEC_ST_II_2 16 – ZENNER_MULTIDATA_WR3 17 – PULSE_STK_15
49	Data collection period	1 byte	1 – 1 hour 2 – 6 hours 3 – 12 hours 4 – 24 hours 5 – 5 minutes 6 – 15 minutes 7 – 30 minutes
55	Time zone, in minutes	2 bytes	from -720 to 840

5 STORAGE AND TRANSPORTATION REQUIREMENTS

The M-BUS-2 converter shall be stored in the original packaging in heated room at temperatures +5°C to +40°C and relative humidity less than 85%.

The converter shall be transported in covered freight compartments of all types at any distance at temperatures -40°C to +85°C.

Long-term storage of the device in the "Storage" mode can lead to battery passivation

6 CONTENT OF THE PACKAGE

The M-BUS-2 device is delivered complete with:

Converter M-BUS-2 – 1 pc.

Antenna LoRa – 1 pc.

24-pin bus – 1 pc.

Factory certificate – 1 pc.

7 WARRANTY

The manufacturer guarantees that the product complies with the current technical documentation, subject to the storage, transportation and operation conditions specified in the "User Manual".

The warranty period is 36 months if the number of data packets sent by the product is up to 5,000.

The warranty period of operation is calculated from the date of sale marked in the product factory certificate, and from the release date when such a mark is absent. During the warranty period, the manufacturer is obliged to provide repair services or replace a failed device or its components.

The manufacturer does not bear warranty obligations in the event of a product failure if:

- the product does not have a factory certificate;

- the factory certificate does not have an TCD stamp and / or there is no sticker with information about the device;

- the serial number (DevEUI, EMEI) printed on the product differs from the serial number (DevEUI, EMEI) specified in the factory certificate;

- the product has been subject to alterations in the design and / or software which are not provided for in the operational documentation;

- the product has mechanical, electrical and / or other damage and defects arising from violation of the conditions of transportation, storage and operation;

- the product has traces of repair outside the manufacturer's service center;

- the components of the product have internal damage caused by the ingress of foreign objects / liquids and / or natural disasters (flood, fire, etc.).

The average service life of the product is 7 years.

In the event of a warranty claim, contact the service center:

119A, Bol'shevistskaya Str., Novosibirsk, 630009, Russia.

Tel.: +7 (383) 206-41-35.

e-mail: remont@vega-absolute.ru

DOCUMENT INFORMATION	
Title	M-BUS-2 LoRaWAN converter
Document type	Manual - Translation from Russian
Document number	V02-MBUS2-01
Revision and date	12 of 16.06.2022

Revision History

Revision	Data	Name	Comments
01	20.12.2017	KEV	Document creation date
02	05.04.2018	TII	Supported connected devices list, transparent mode is not supported, minor changes
03	10.08.2018	KEV	Changes in the device logic, frequency plans are added, changes in the communication protocol, in technical characteristics, new supported meters are added
04	06.11.2018	KEV	Typo in specification is fixed, list of supported heat meters is refreshed
05	01.07.2019	KEV	Changes in the communication protocol, in specification, settings by the air described, added "Marking" part, communication periods changed, device AppEui changed
06	15.04.2020	KEV	We corrected the table with ID settings and some minor changes
07	14.09.2020	KEV	Settings packet type changed to 00, Landis Gir removed from the list of supported devices
08	03.02.2021	KEV	The number of warranty packets is changed, we remove AppEui number from specification
09	06.07.2021	PKN	The list of supported metering devices, volume of memory for accumulation of packages and warranty conditions are changed; support of poll at difference types of metering devices and new mode of universal poll are add.
10	13.10.2021	KMA	Planned review
11	07.12.2021	KMA	Minor changes
12	16.06.2022	KMA	Minor changes

vega-absolute.ru

Operation Manual © Vega-Absolute OOO 2017-2022